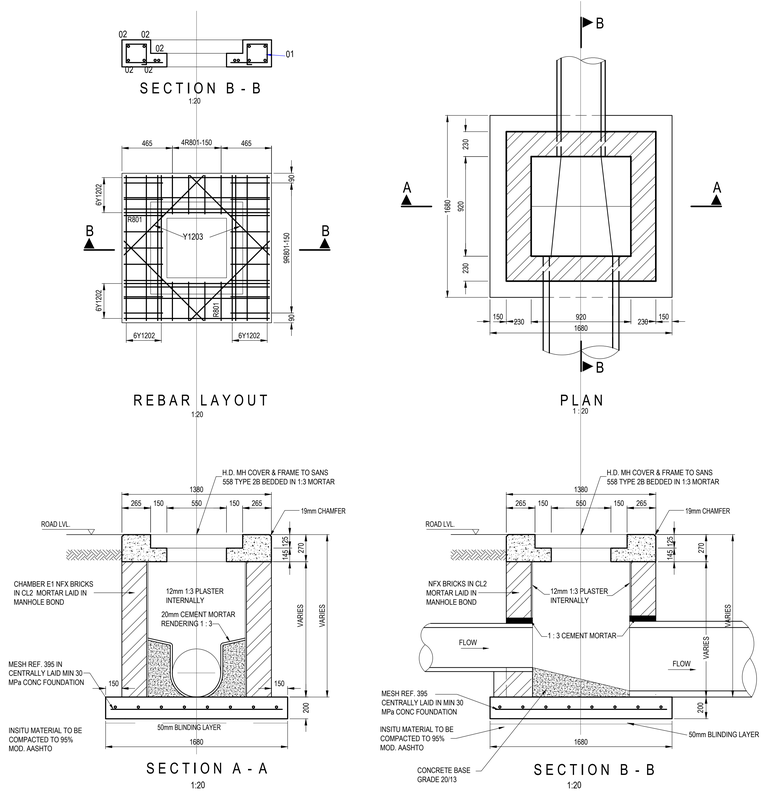

MEMBER	No OFF	TYPE DIA	MARK	TOTAL	LENGTH	CODE	BENDING DIMENSIONS A	B	C	D	E	MASS
1-OFF MANHOLE TOP E1	26	R8	01	26	900	73	170	180	330			10
	24	Y12	02	24	1300	20	1300					28
	4	Y12	03	4	900	20	900					3

TOTAL MASS IN kg.	R6	R8	R10	R12	R16	R20	R25	R32
		10						
41	Y6	Y8	Y10	Y12	Y16	Y20	Y25	Y32
				31				

LIGHT DUTY M.H. TYPE SD1 Ø300 to Ø600

DO NOT SCALE - IF IN DOUBT, ASK

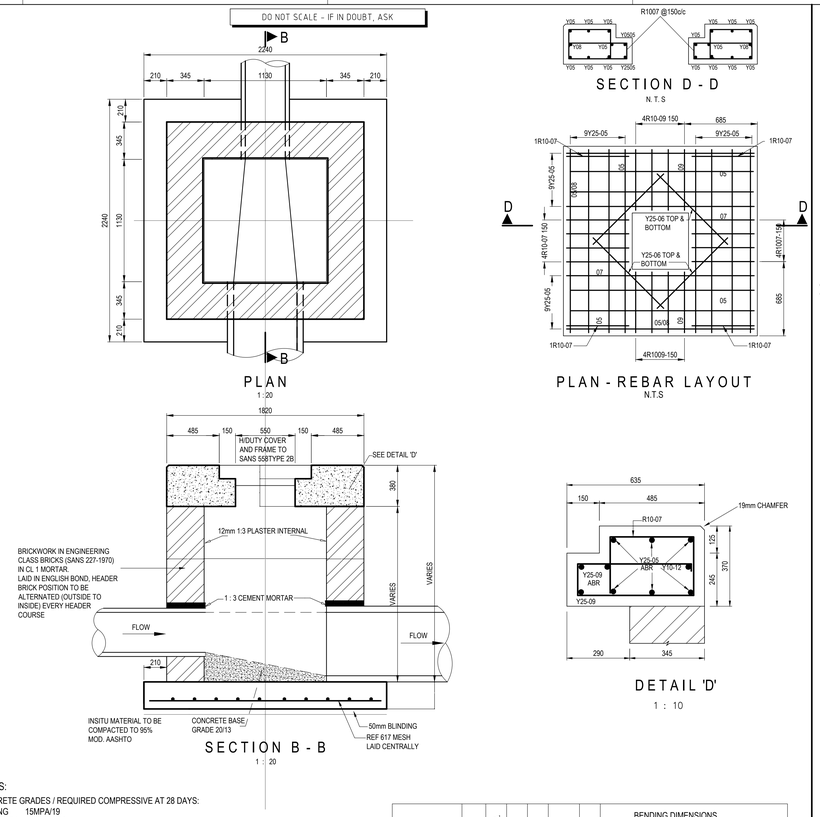

NOTES:

1. CONCRETE GRADES / REQUIRED COMPRESSIVE AT 28 DAYS:
   BLINDING 15MPA/19
   STRUCTURAL 40MPA/26
2. A BLINDING LAYER OF 50mm (MIN.) SHALL BE PROVIDED UNDER ALL FOUNDING STRUCTURAL CONCRETE. WHERE SPECIFIED
3. FOUNDING COMPACTED IN-SITU LAYER TO BE INSPECTED BY THE ENGINEER PRIOR TO THE CASTING OF BUILDING LAYER.
4. THE ENGINEER SHALL BE NOTIFIED AT LEAST 24 HOURS IN ADVANCE FOR THE INSPECTION OF THE WORKS PRIOR TO CONCRETING.
5. CONCRETE COVER TO OUTER REINFORCING BARS = 50mm UNLESS OTHERWISE SPECIFIED.
6. APPROVED COVER BLOCKS TO BE PROVIDED.
7. REINFORCING STEEL SHALL COMPLY WITH SANS 920 AND SHALL BE CUT AND BENT IN ACCORDANCE WITH SANS 82.
8. CHARACTERISTIC STRENGTHS OF REINFORCING STEEL SHALL BE AS FOLLOWS:
   HIGH YIELD STEEL (Y) BARS - 450MPA
   MILD STEEL (R) BARS - 250MPA
9. ALL EXPOSED CONCRETE EDGES SHALL BE CHAMFERED USING 19MM CHAMFERS, WHERE SPECIFIED.
10. CONCRETE PLACING SHALL BE IN ACCORDANCE WITH SANS 0100 PART 2.
11. CONCRETE FINISHES SHALL BE AS FOLLOWS:
    CONCEALED SURFACES - ROUGH OFF-SHUTTER FINISH
    EXPOSED SURFACES - SMOOTH OFF-SHUTTER FINISH, REPAIRED AND RUBBED DOWN USING CARBORUNDUM BLOCKS WHERE NECESSARY.
12. PAVEMENT REPAIRS AROUND MANHOLES TO BE REINSTATED TO MATCH EXISTING, AS DIRECTED BY TECH-OFFICER.

MEMBER	N° OFF	TYPE	DIA.	MARK	TOTAL	LENGTH	CODE	BENDING DIMENSIONS A	B	C	D	E	MASS
1 - OFF MANHOLE TOP SW2	36	Y25	05	36	1900	34	1710						263
	8	Y25	06	8	1000	20	1000						31
	12	R10	07	12	2100	75	250	380	270	530	140		16
	4	Y10	08	4	1700	20	1700						4
	8	R10	09	8	2000	75	200	380	220	530	140		10

TOTAL MASS IN kg	R6	R8	R10	R12	R16	R20	R25	R32
			26					
324	Y6	Y8	Y10	Y12	Y16	Y20	Y25	Y32
			4					
							294	

HEAVY DUTY M.H. TYPE SD2 Ø300 to Ø750

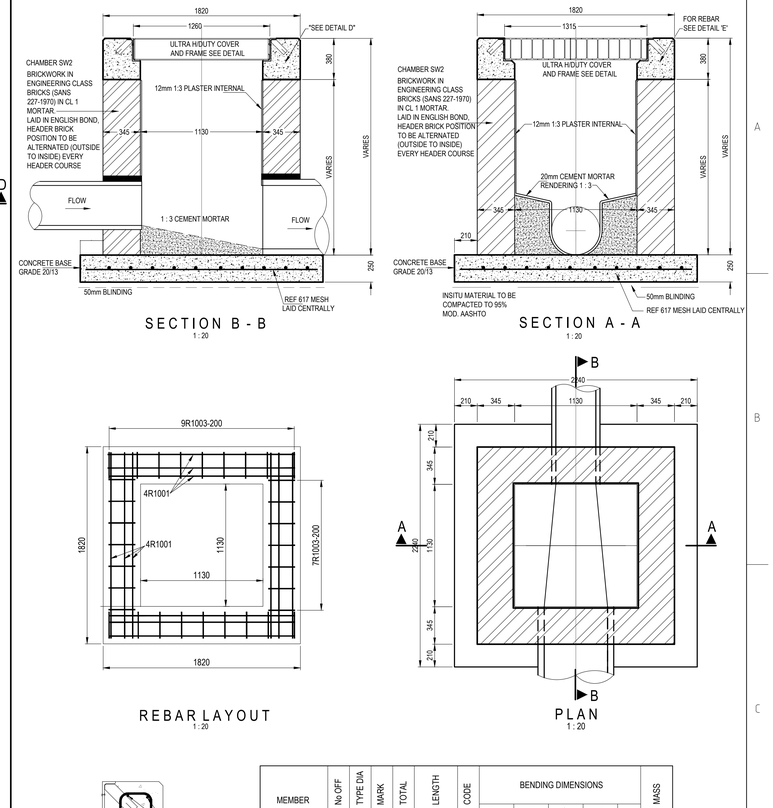

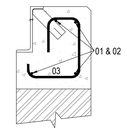

DETAIL 'E'
1 : 10

MEMBER	No OFF	TYPE DIA	MARK	TOTAL	LENGTH	CODE	BENDING DIMENSIONS A	B	C	D	E	MASS
1-OFF TYPE SW3	16	R10	01	16	1720	20						17
	30	R10	03	32	800	55	160	150	280	245	65	16
TOTAL MASS IN kg. 33							R10 33					

MANHOLE TOP - REBAR SCHEDULE

ULTRA HEAVY DUTY M.H. TYPE SD3 Ø300 to Ø750

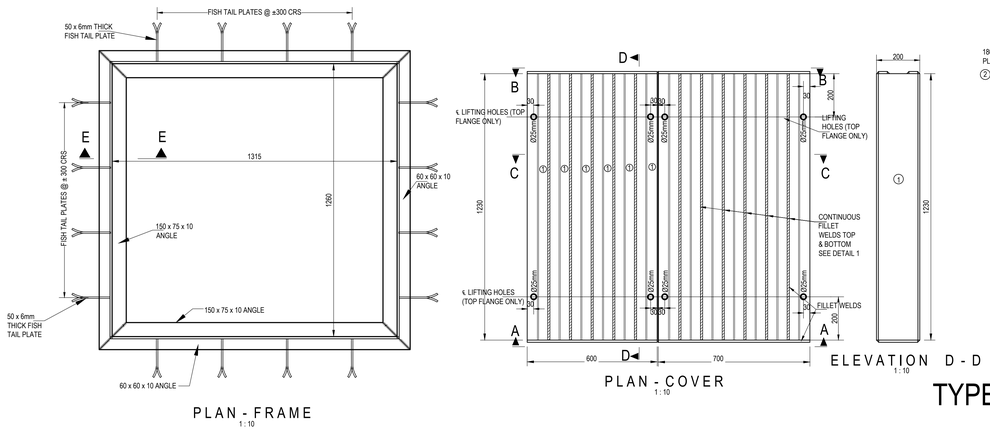

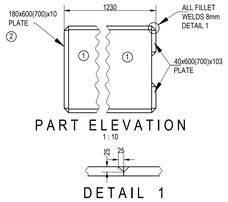

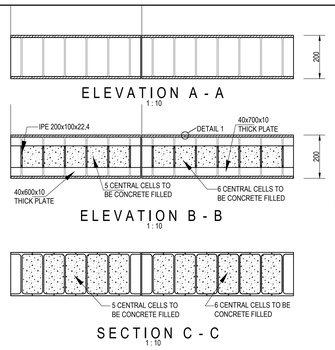

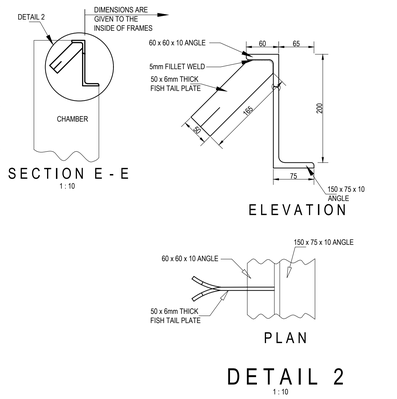

NOTES:

1. ALL STEEL TO BE GRADE 300W GALVANISED TO SANS ISO 1461

2. WELDING TO BE IN ACCORDANCE WITH BS 5135

3. WELDING OF IPE FLANGES 3.1 CHAMFER FLANGE EDGES AS SHOWN IN DETAIL 1
3.2 FORM CONTINUOUS WELDS TO TOP AND BOTTOM FLANGES AS SHOWN
3.3 GRIND TOP WELDS FLUSH OVER FULL LENGTH
3.4 GRIND BOTTOM WELDS FLUSH OVER FIRST 70mm OF EACH END (SEATING AREA ONLY)

4. WELDING OF END PLATES
4.1 WELD 180mm END PLATE CONTINUOUSLY ACROSS SECTION FLANGES USING 8mm FILLET WELD
4.2 WELD 40mm END PLATE CONTINUOUSLY ACROSS SECTION FLANGES AND AT THE WEB INTERSECTIONS
4.3 DRILL Ø25mm LIFTING SLOTS TO TOP FLANGES AT ALL FOUR CORNERS (SEE PLAN)

5. WELDING PROCEDURE
5.1 THE WELDING PROCEDURE AND SEQUENCE ADOPTED SHALL BE SUCH THAT WELDING DISTORTION OF THE COVER IS AVOIDED

6. CONCRETE INFILL TO COVERS
6.1 WITH THE COVERS UPENDED AS SHOWN IN ELEVATION D, FILL THE INDICATED CENTRAL CELLS WITH GRADE 40MPa/19mm CONCRETE AND STRIKE OFF LEVEL WITH THE END PLATES
6.2 CONCRETE FINISH TO BE WOOD FLOAT

TYPE SD3 M.H. - ULTRA HEAVY DUTY FRAME & COVER

DRAWING NO.	REFERENCE

REFERENCE DRAWINGS

NOTES:
a. THIS DRAWING IS THE PROPERTY OF NPA. COPYRIGHT, PATENTS AND ALL INDUSTRIAL PROPERTY RIGHTS RESERVED.
b. MEASUREMENTS ARE BASED ON METRIC SYSTEM.
c. ALL LEVELS ARE IN METRES TO MEAN SEA LEVEL (MSL) WHICH IS 0.9m ABOVE CHART DATUM (PORT).
d. THE CONTRACTOR SHALL VERIFY ALL CONDITIONS ON THE SITE AND NOTIFY THE ENGINEER OF ANY VARIATIONS FROM DIMENSIONS BEFORE CONSTRUCTION.

NO.	DESCRIPTION	BY	CHKD	APPD	DATE
01	ISSUED FOR CONSTRUCTION	HvdW	RM	RN	28/04/2023
00	ISSUED FOR APPROVAL	HvdW	RM	RN	01/03/2023

REVISIONS

This Document including all design and information therein is Confidential Intellectual Property of Transnet
Copyright and all other rights are reserved by Transnet. This Document may only be used for its intended purpose.

CONTRACTOR / CONSULTANT

TITLE	NAME	SIGN	DATE

OPERATING DIVISIONS

TITLE	NAME	SIGN	DATE

TRANSNET PORT TERMINALS

TITLE	NAME	SIGN	DATE
DRAWN	HvdW		01 03 23
CHECKED	RM		01 03 23
DESIGNED	HvdW		01 03 23
CHECKED	RM		01 03 23

PR.ENG. / PR.TECH./PR. ARCH

NAME	R. NADOO	DATE
SIGNATURE		28 04 23
REG. NUMBER	201070216	
SCALE :	AS SHOWN	A0

Transnet Port Terminals

TRANSNET

PORT OF SALDANHA

SALDANHA STORMWATER MANAGEMENT

TYPICAL STORMWATER MANHOLE DETAILS

PROJECT NUMBER	OD	FBS	DIS	TYPE	DRAWING NO.	SHEET	REV	ID
5200157	2001	C	DE	0001	02	01		HD